Part Number: 666.102— Technical Sheet

Long Bras Médical ajustable en hauteur de 700 + 930 mm, fixation murale directe poids supporté 6-12 Kg

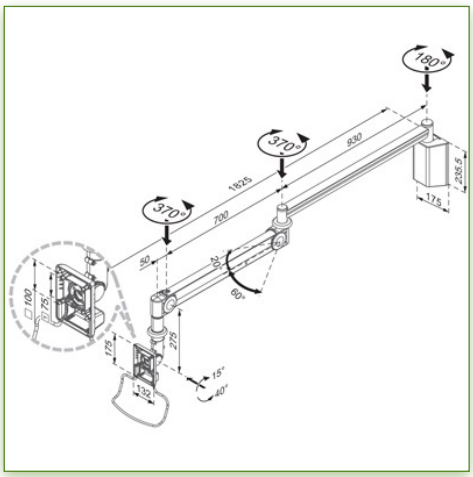

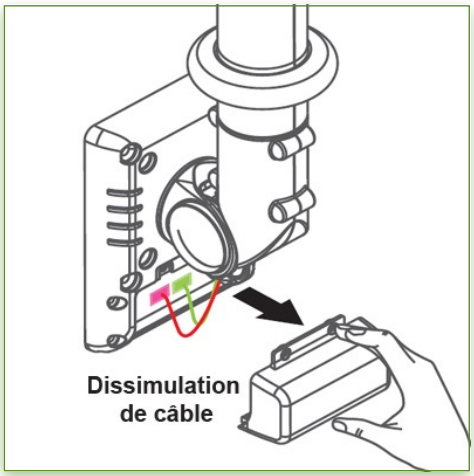

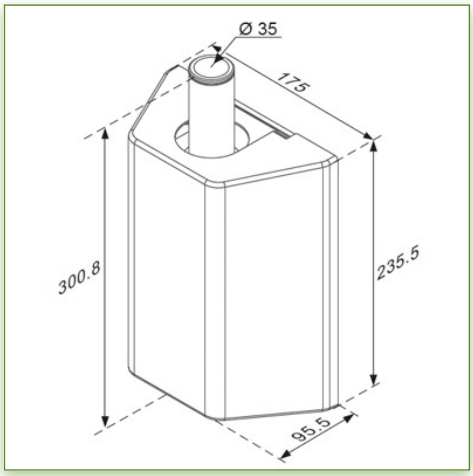

Display Compatibility: 26" Wide (Weight)
Supported Weight: 6-12 Kg
VESA standard: 75 / 100 mm

Up to 26" Wide (Weight)

75/100 mm

6-12 Kg

MEDICAL GRADE

Medical Grade

Do not hesitate to contact us if you have any questions about this product.

Warranty: 5 years

000.666.102

White

90 x 30 x 47 cm

20 Kg

666.102

Anti-bacterial properties:

IT medical arms are now designed with Microban antibacterial protection,
a revolutionary treatment that guarantees optimal hygiene. IT medical arms integrate Microban and other antibacterial agents into all medical products. It inhibits the growth of bacteria of all types. This is not a surface treatment.
It is 100% in the totality of the product.
It does not alter the physico-mechanical properties of the medical arm lift system. Simulations over 30 years show that 100% of the antibacterial properties are maintained.
All medical articulated arms incorporate Microban. Microban is the world's leading provider of anti-bacterial solutions. It has been successfully applied for more than 35 years in a wide range of products used in the hospital, construction and food industries.